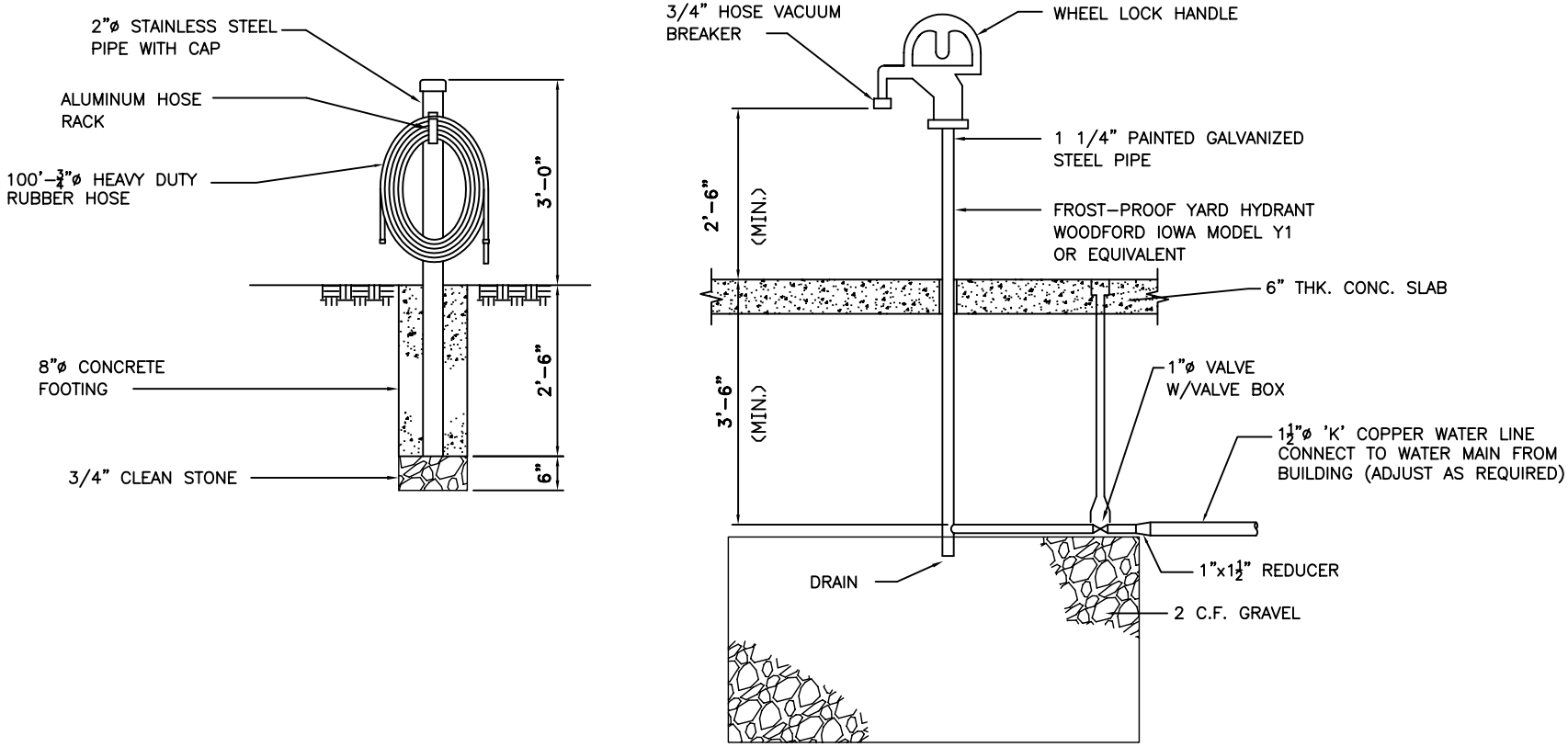

BY	DATE	REVISIONS

TOWNSHIP OF FLORENCE
WATER & SEWER DEPARTMENT

YARD HYDRANT

DATE : 6/05
DWN BY :

20