ALL GALV. STEEL PIPE SHALL BE HOT DIPPED IN CONFORMANCE WITH ASTM A123

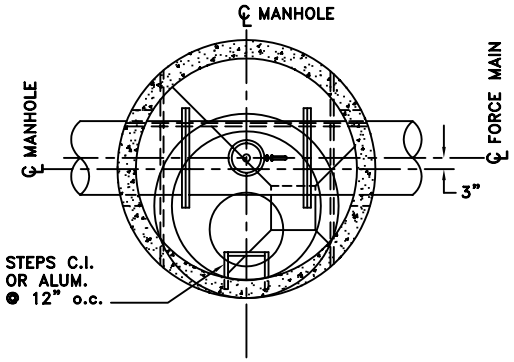

PLAN

AIR RELEASE MANHOLE SCHEDULE			
"A" FORCE MAIN SIZE Inches	"B"* OPNG. FOR F.M. Inches	"C" FITTING SIZE Inches	"E" M.H. DIA. (I.D.) Inches
4	10	2	72
6	12	2	72
8	15	2	72
10	18	2	72
12	20	2	72
16	25	3	72
18	27	3	72
20	29	3	72
24	33	3	72

* BLOCK MANHOLE ONLY

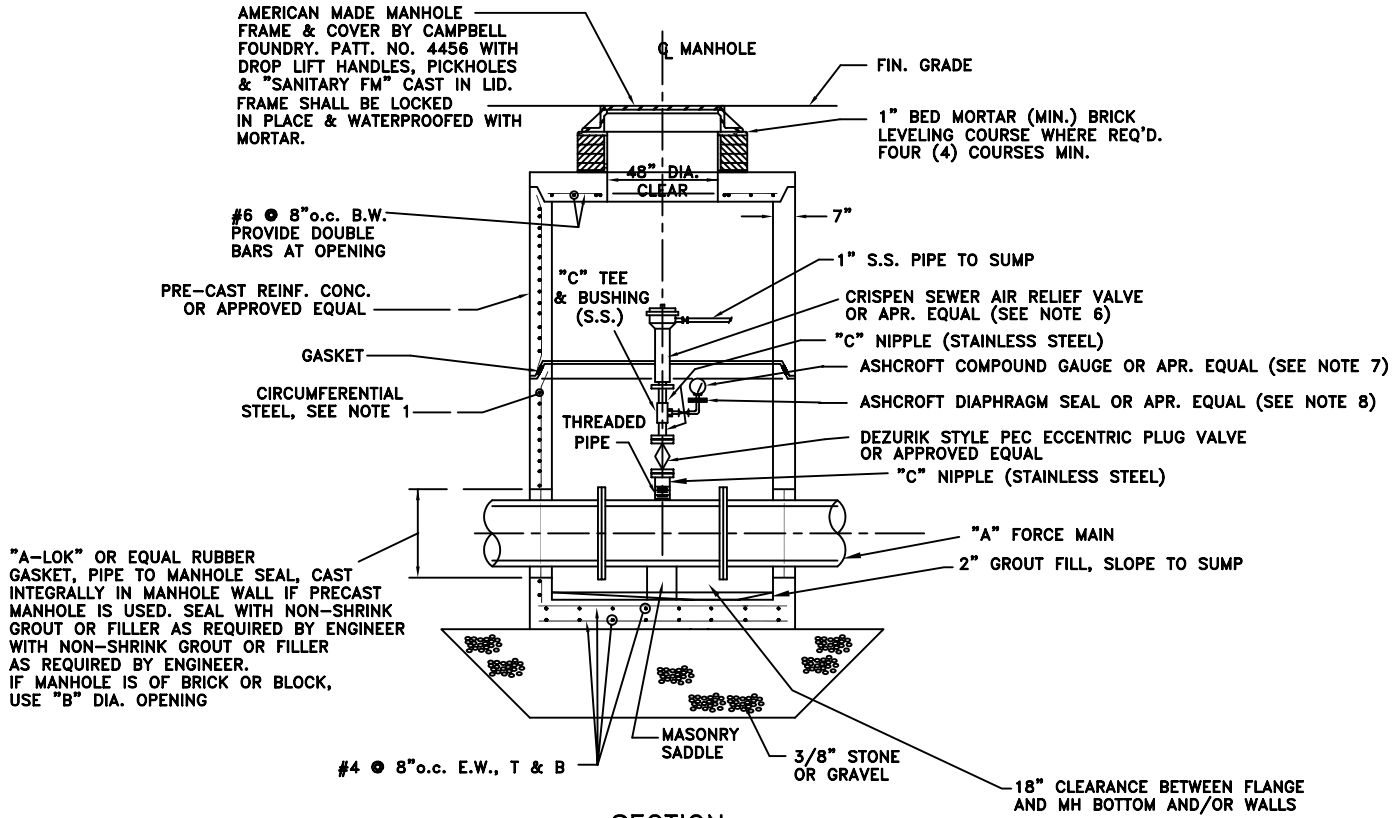

SECTION

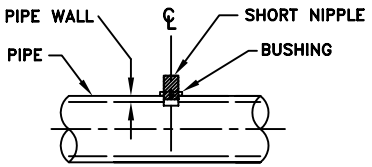

DETAIL FOR 10" MAIN OR ABOVE

NOTES(AIR RELEASE MANHOLE):

1. CIRCUMFERENTIAL STEEL 72" DIA. M.H. – 0.18 SQ. IN. / VERT. FT.
2. 4000 PSI CONCRETE – PRECAST MANHOLE SECTIONS
3. ALL VALVES SHALL CLOSE IN CLOCKWISE DIRECTION
4. PRECAST REINFORCED MANHOLE SECTIONS TO COMPLY WITH ASTM SPECIFICATION C478.
5. CONTRACTOR SHALL BE RESPONSIBLE FOR CONSTRUCTING ADEQUATE BALLAST TO OFFSET FLOTATION FORCES ACTING ON MANHOLES.
6. CRISPEN AIR RELIEF VALVE TO BE MODEL S20SB WITH BACKFLUSH OPTION TO SUMP OR PVC.
7. COMPOUND GAUGE SHALL BE 4 1/2" DIAL, 30" VAC., SAME PRESSURE RANGE AS PUMP DISCHARGE GUAGE, STAINLESS STEEL BOURDON TUBE TYPE, 1/2" BOTTOM CONNECTION WITH A PHENOLIC CASE.
8. DIAPHRAGM SEAL SHALL HAVE 1" THREADED PROCESS CONNECTION, FLUSHING CONNECTION, 1/2" INSTRUMENT CONNECTION, AISI TYPE 316 STAINLESS STEEL BOTTOM HOUSING & HALOCARBON FILLING FLUID. PROVIDE VITON DIAPHRAGM MATERIAL. SEAL SHALL WORK UNDER VACUUM CONDITIONS.
9. ALL GALV. STEEL PIPE SHALL BE HOT DIPPED IN ACCORDANCE WITH ASTM A123.

BY	DATE	REVISIONS

TOWNSHIP OF FLORENCE
WATER & SEWER DEPARTMENT

FORCE MAIN AIR RELIEF MANHOLE DETAIL

DATE : 6/05
DWN BY :

6