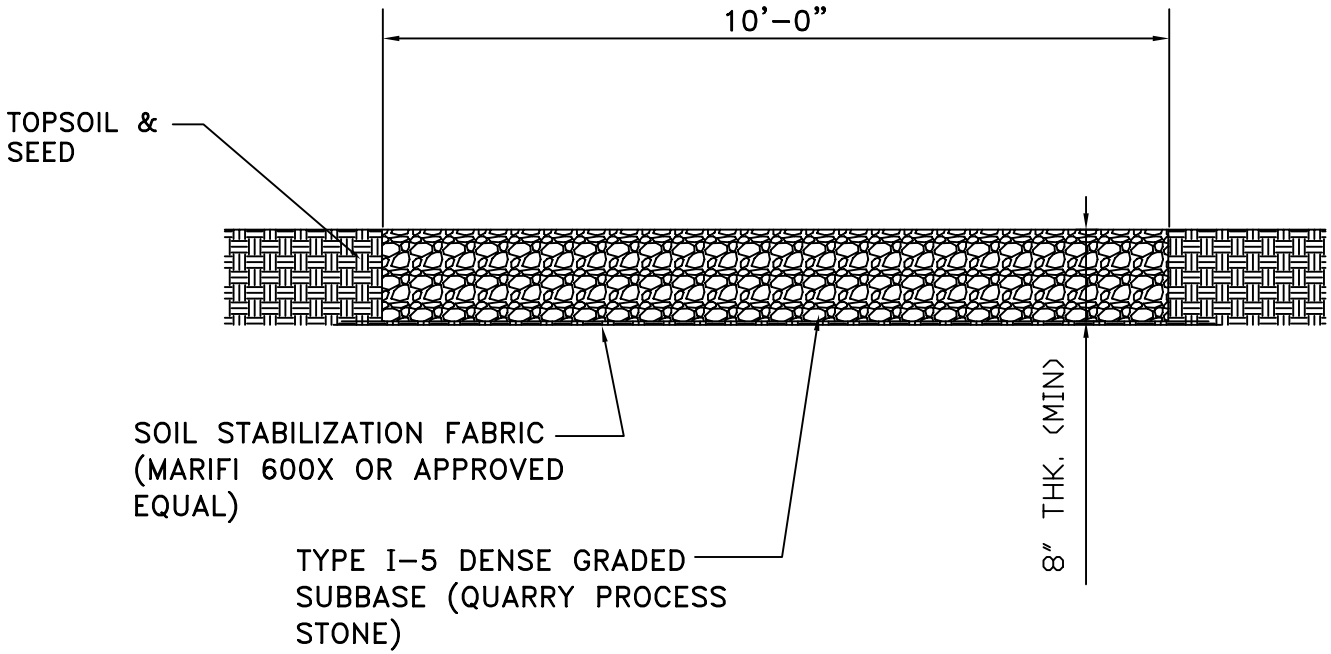

ACCESS DRIVE WITHIN UTILITY EASEMENTS

N.T.S.

BY	DATE	REVISIONS

TOWNSHIP OF FLORENCE
WATER & SEWER DEPARTMENT

ACCESS DRIVE WITHIN UTILITY EASEMENTS

DATE : 3/96
DWN BY :

28