TAPPING SLEEVES, CROSSES AND VALVES

TYPE OF PIPE	MODEL NUMBERS			SIZE RANGE
	SLEEVE	CROSS	VALVE	
CAST IRON	H-615	H-715	T-2360-16	2" - 12"
DUCTILE IRON	H-615	H-715	T-2360-16	2" - 12"
ASBESTOS CEMENT	H-619	H-719	T-2360-16	2" - 12"
PVC	H-304	N/A	T-2360-16	2" - 12"

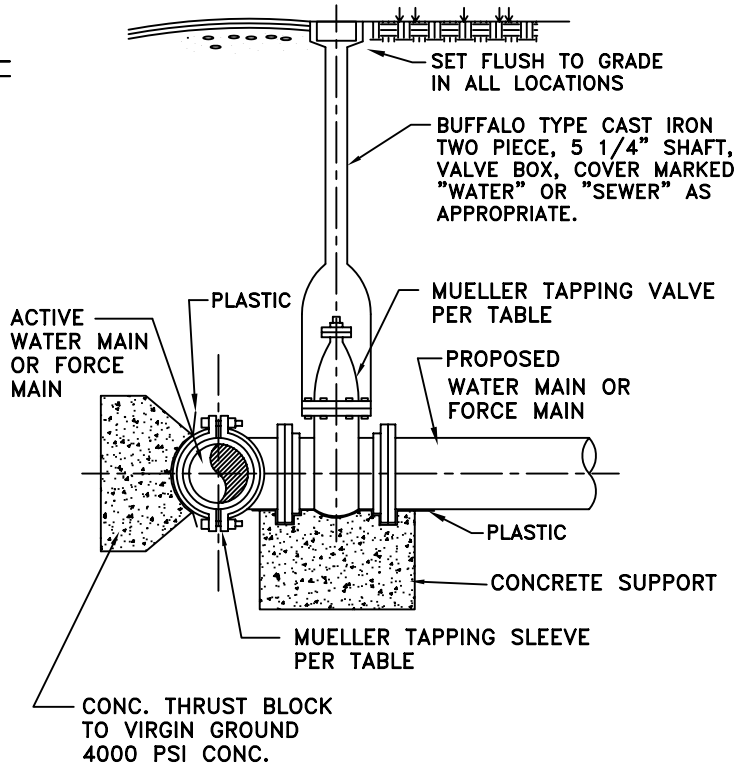

INSTALLATION DETAIL

N.T.S.

NOTES :

1. ALL PART NUMBERS REFER TO PRODUCTS OF THE MUELLER CO. DECATUR, IL. OR APPROVED EQUAL.
2. ALL FLANGE DIMENSIONS AND DRILLING COMPLY WITH ANSI B16.1, CLASS 125 AND WITH MSS SP-60. MECHANICAL JOINTS COMPLY WITH ANSI/AWWA C111.
3. PROVIDE THRUST BLOCKS AND VISQUENCE WRAPPING IN CONFORMANCE WITH STANDARD DETAILS.
4. ALL VALVES SHALL OPEN IN THE COUNTERCLOCKWISE DIRECTION.
5. ALL TAPPING EQUIPMENT MUST BE DISINFESTED (CHLORINE MAY BE SWABBED ON INTERIOR OF ALL FITTINGS).
6. LINE MUST BE SUBSEQUENTLY BLOWN OFF.

BY	DATE	REVISIONS

TOWNSHIP OF FLORENCE
WATER & SEWER DEPARTMENT

WET TAP CONNECTION WITH TAPPING SLEEVES, CROSSES AND VALVES

DATE : 4/95
DWN BY :