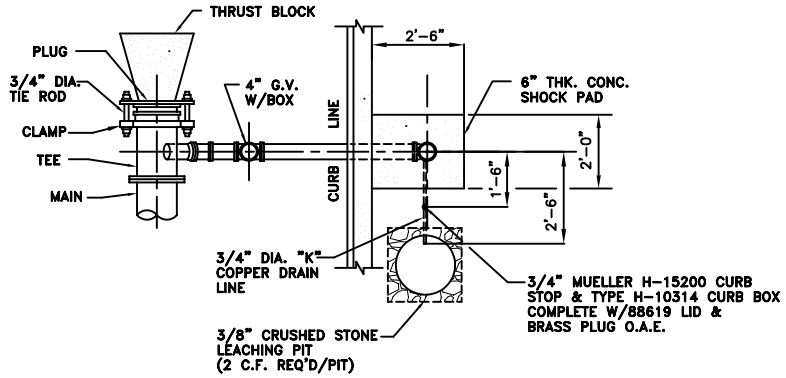

PLAN

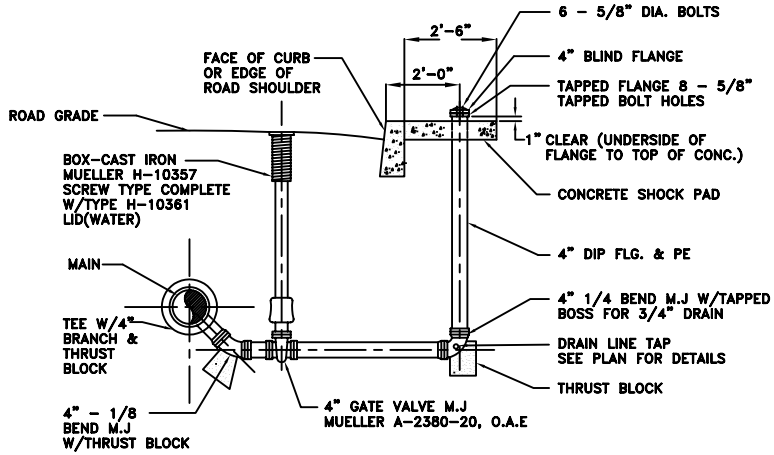

NOTE: ITEM TO INCLUDE TEE, 4"-1/8 BEND 4" GATE VALVE & BOX, 4" D.I.P. 4"-1/4 BEND MJ. W/TAPPED BOSS, 4" FL & PE. D.I.P., 4" BLIND FLANGE, CONC. SHOCK PAD, 3/4" COPPER DRAIN LINE W/GATE VALVE & CRUSHED STONE LEACHING PIT, ALL THRUST BLOCKS.

SECTION

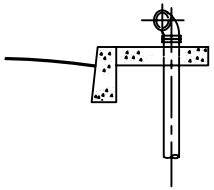

PRIOR TO BLOWING OFF OF MAIN, REMOVE 4" BLIND FLG. & INSTALL 90% FLANGE. ELBOW BOLTS PROVIDED FOR BLIND FLANGE. IT IS RECOMMENDED THAT THE ELBOW BE INSTALLED TO DIRECT THE WATER INTO THE ROADWAY AT A 45° ANGLE FROM THE CENTERLINE OF BLOW-OFF LINE.

OPERATING INSTRUCTIONS

TYPICAL BLOW-OFF DETAIL

NOT TO SCALE

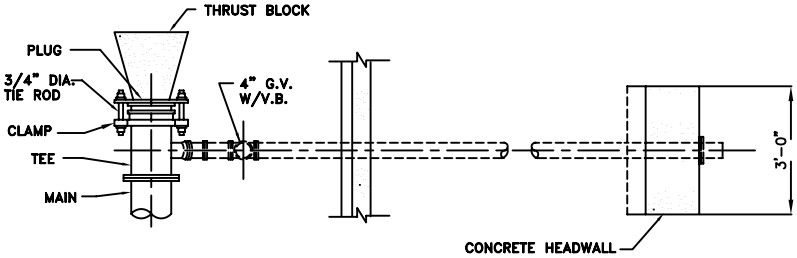

PLAN

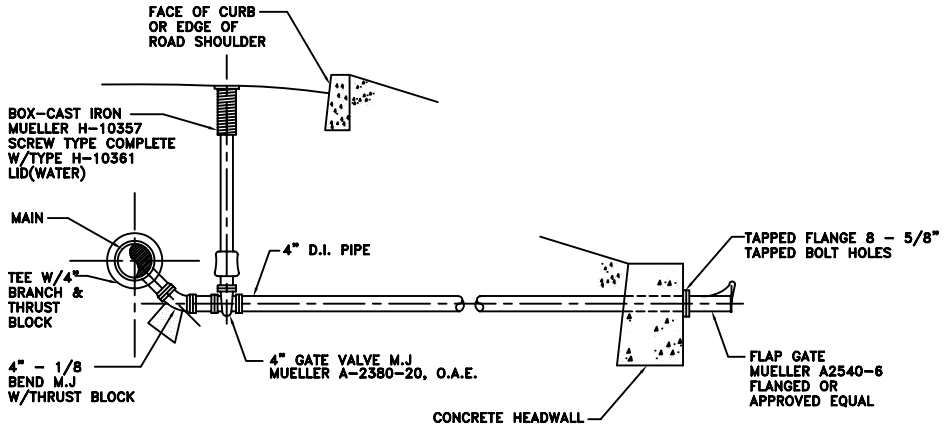

SECTION

ALTERNATE BLOW-OFF DETAIL

BY	DATE	REVISIONS

TOWNSHIP OF FLORENCE
WATER & SEWER DEPARTMENT

WATER MAIN BLOW OFF DETAILS

DATE : 4/95

DWN BY :

24